Prozesstechnik
www.conntronic.com
Solutions for welding machines design

CD welding of half-shells / tacking operations

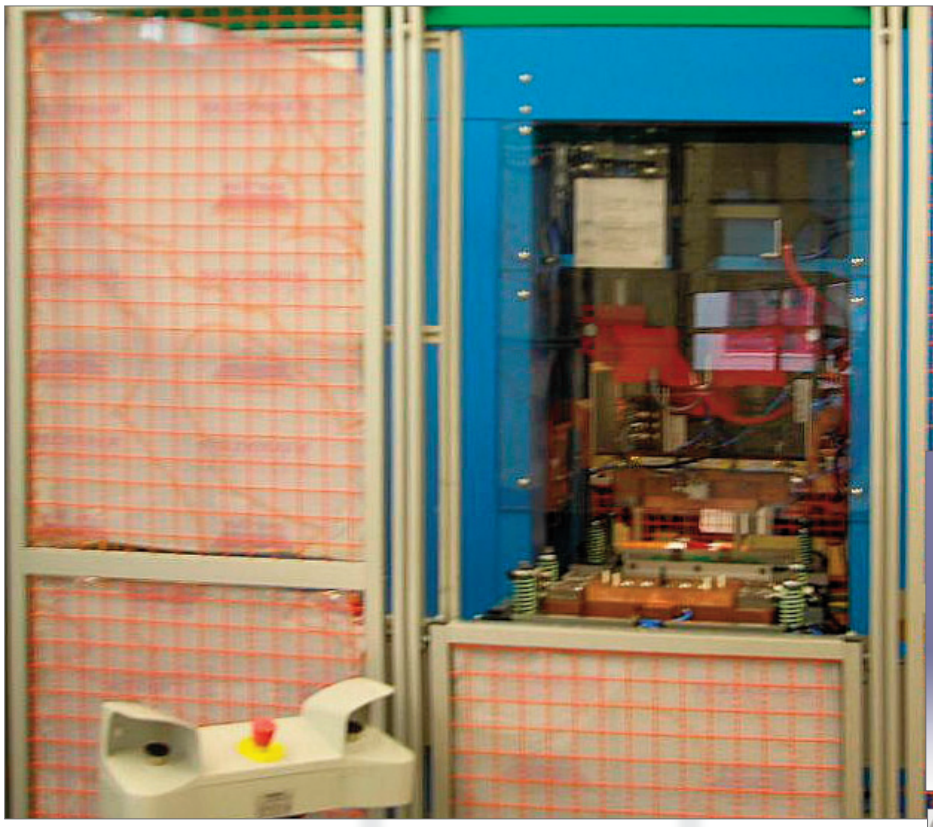

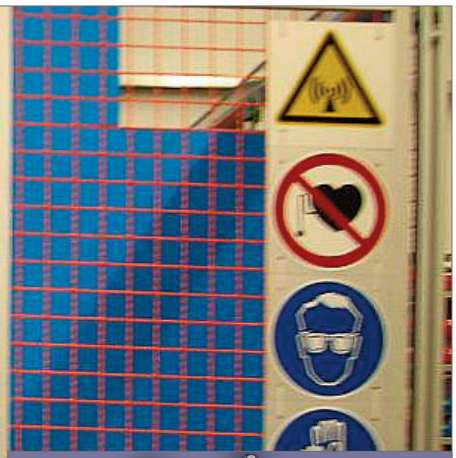

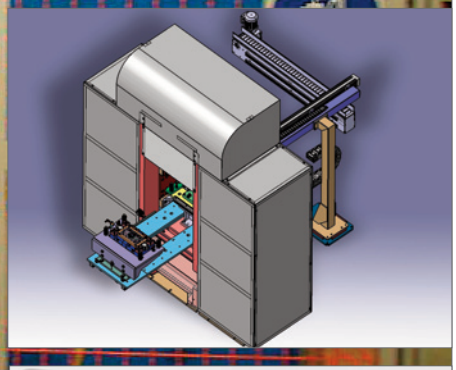

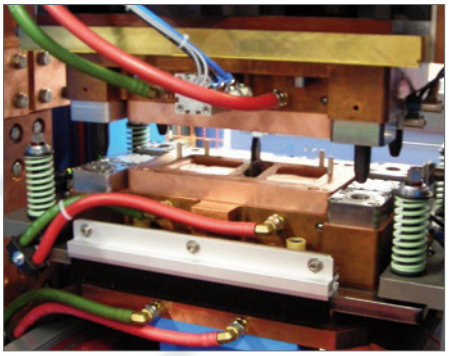

The task:

Pressed half-shells must be economically tacked for subsequent laser welding. The remaining gap must not exceed 0.1 mm in any position.

The conntronic solution:

CD Portal system with component shuttle. Loaded manually from the front, with automatic removal from the rear and transfer to the laser. Flexible system for several component types. Seam length of tacking approx. 700 mm.

Technical data of the system:

Space requirement WxDxH	2700x3900x2900 mm
System cycle time	12.0 s
CD cylinder	Hydraulic stroke 200 mm
Electrode force	100 kN at 6 bar
Max. welding energy	60,000 Ws, 12 kN

We develop a fitting solution for your individual requirements. Challenge us.

Solutions for welding machines design

ct-services

+ Customer orientated engineering for economical production processes
+ Product and component development
+ Service

conntronic Prozess- und Automatisierungstechnik GmbH
Endorferstr. 13
D-86167 Augsburg
Fon: +49 (0) 821 / 54 32 24 - 0
Fax: +49 (0) 821 / 54 32 24 77
www.conntronic.com